OXFORD CAMBRIDGE AND RSA EXAMINATIONS

AS LEVEL

Y533/01

FURTHER MATHEMATICS A

Mechanics

TUESDAY 22 MAY 2018: Afternoon

TIME ALLOWED: 1 hour 15 minutes plus your additional time allowance

MODIFIED ENLARGED

YOU MUST HAVE:

Printed Answer Booklet sent with the standard paper or any suitable paper provided by the centre. The Printed Answer Booklet may be enlarged by the centre.
Formulae AS Level Further Mathematics A sent with the standard paper

YOU MAY USE:

a scientific or graphical calculator

READ INSTRUCTIONS OVERLEAF

DC (KN/SW) 170421
© OCR 2018 [T/508/5499]

7948040778

INSTRUCTIONS

Use black ink. HB pencil may be used for graphs and diagrams only.

Complete the boxes provided on the Printed Answer Booklet with your name, centre number and candidate number or write them on the paper provided.

Answer ALL the questions.

IF YOU USE THE PRINTED ANSWER BOOKLET WRITE YOUR ANSWER TO EACH QUESTION IN THE SPACE PROVIDED. If additional space is required, you should use the lined page(s) at the end of the Printed Answer Booklet. The question number(s) must be clearly shown.

You are permitted to use a scientific or graphical calculator in this paper.

Final answers should be given to a degree of accuracy appropriate to the context.

The acceleration due to gravity is denoted by $g\,\mathrm{m\,s^{-2}}$. Unless otherwise instructed, when a numerical value is needed, use $g = 9.8$.

INFORMATION

The total mark for this paper is 60.

The marks for each question are shown in brackets [ ].

YOU ARE REMINDED OF THE NEED FOR CLEAR PRESENTATION IN YOUR ANSWERS.

BLANK PAGE

Answer ALL the questions.

1 A particle P of mass m kg is attached to one end of a light inextensible string of length 3.2 m. The other end of the string is attached to a fixed point O. The particle is held at rest, with the string taut and making an angle of 15° with the vertical. It is then projected with velocity $1.2\,\mathrm{m\,s^{-1}}$ in a direction perpendicular to OP and with a downwards component so that it begins to move in a vertical circle (see diagram below). In the ensuing motion the string remains taut and the angle it makes with the downwards vertical through O is denoted by θ°.

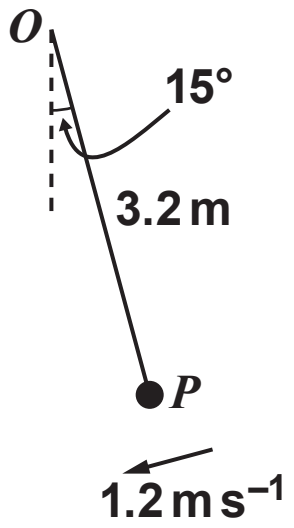

(i) Find the speed of P at the point on its path vertically below O. [4]

(ii) Find the value of θ at the point where P first comes to instantaneous rest. [2]

2 A particle P of mass 3.5 kg is moving down a line of greatest slope of a rough inclined plane. At the instant that its speed is $2.1\,\mathrm{m\,s^{-1}}$ P is at a point A on the plane. At that instant an impulse of magnitude 33.6 N s, directed up the line of greatest slope, acts on P.

(i) Show that as a result of the impulse P starts moving up the plane with a speed of $7.5\,\mathrm{m\,s^{-1}}$. [2]

While still moving up the plane, P has speed $1.5\,\mathrm{m\,s^{-1}}$ at a point B where $AB = 4.2$ m. The plane is inclined at an angle of 20° to the horizontal. The frictional force exerted by the plane on P is modelled as constant.

(ii) Calculate the work done against friction as P moves from A to B. [4]

(iii) Hence find the magnitude of the frictional force acting on P. [2]

P first comes to instantaneous rest at point C on the plane.

(iv) Calculate AC. [3]

3 **A particle moves in a straight line with constant acceleration. Its initial and final velocities are u and v respectively and at time t its displacement from its starting position is s. An equation connecting these quantities is $s = k(u^{\alpha} + v^{\beta})t^{\gamma}$, where k is a dimensionless constant.**

(i) Use dimensional analysis to find the values of α, β and γ. [6]

(ii) By considering the case where the acceleration is zero, determine the value of k. [2]

4 Three particles A, B and C are free to move in the same straight line on a large smooth horizontal surface. Their masses are 1.2 kg, 1.8 kg and m kg respectively (see diagram below). The coefficient of restitution in collisions between any two of them is $\frac{3}{4}$. Initially, B and C are at rest and A is moving with a velocity of $4.0\,\text{m}\,\text{s}^{-1}$ towards B.

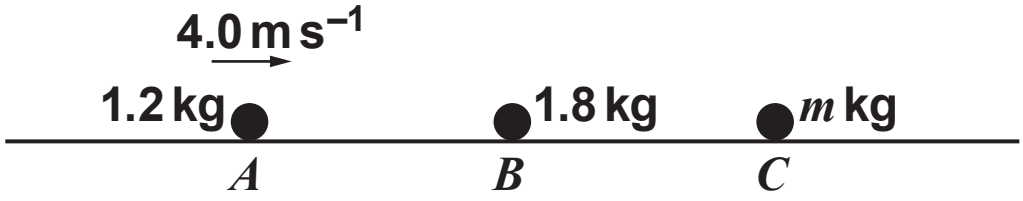

(i) Show that immediately after the collision between A and B the speed of B is $2.8\,\text{m}\,\text{s}^{-1}$. [4]

(ii) Find the velocity of A immediately after this collision. [1]

B subsequently collides with C.

(iii) Find, in terms of m, the velocity of B after its collision with C. [4]

(iv) Given that the direction of motion of B is reversed by the collision with C, find the range of possible values of m. [2]

5 The engine of a car of mass 1200 kg produces a maximum power of 40 kW.

In an initial model of the motion of the car the total resistance to motion is assumed to be constant.

(i) Given that the greatest steady speed of the car on a straight horizontal road is $42\,\mathrm{m\,s^{-1}}$, find the magnitude of the resistance force. [2]

The car is attached to a trailer of mass 200 kg by a light rigid horizontal tow bar. The greatest steady speed of the car and trailer on the road is now $30\,\mathrm{m\,s^{-1}}$. The resistance to motion of the trailer may also be assumed constant.

(ii) Find the magnitude of the resistance force on the trailer. [2]

The car and trailer again travel along the road. At one instant their speed is $15\,\mathrm{m\,s^{-1}}$ and their acceleration is $0.57\,\mathrm{m\,s^{-2}}$.

(iii) (a) Find the power of the engine of the car at this instant. [4]

(b) Find the magnitude of the tension in the tow bar at this instant. [2]

In a refined model of the motion of the car and trailer the resistance to the motion of each is assumed to be zero until they reach a speed of $10\,\mathrm{m\,s^{-1}}$. When the speed is $10\,\mathrm{m\,s^{-1}}$ or above the same constant resistance forces as in the first model are assumed to apply to each.

The car and trailer start at rest on the road and accelerate, using maximum power.

(iv) Without carrying out any further calculations,

(a) explain whether the time taken to attain a speed of $20\,\mathrm{m\,s^{-1}}$ would be predicted to be lower, the same or higher using the refined model compared with the original model, [2]

(b) explain whether the greatest steady speed of the system would be predicted to be lower, the same or higher using the refined model compared with the original model. [2]

6 Two particles A and B are connected by a light inextensible string. Particle A has mass 1.2 kg and moves on a smooth horizontal table in a circular path of radius 0.6 m and centre O. The string passes through a small smooth hole at O. Particle B moves in a horizontal circle in such a way that it is always vertically below A. The angle that the portion of the string below the table makes with the downwards vertical through O is θ, where $\cos\theta = \frac{4}{5}$ (see diagram below).

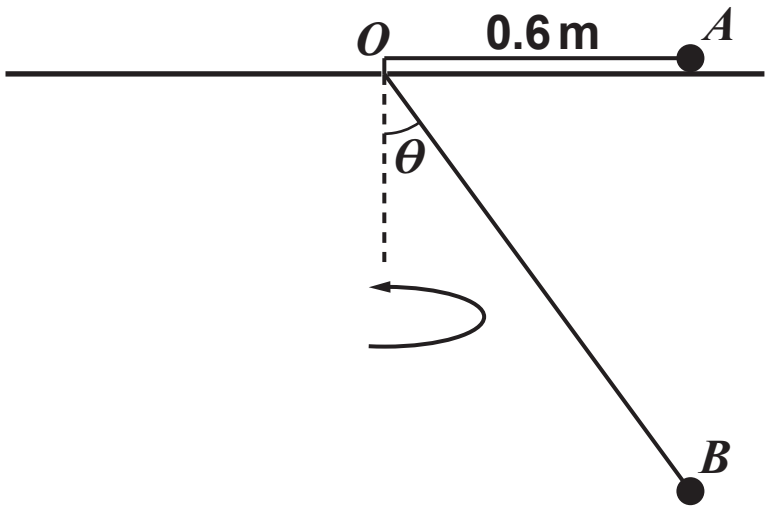

(i) Find the time taken for the particles to perform a complete revolution. [7]

(ii) Find the mass of B. [3]

END OF QUESTION PAPER

BLANK PAGE

OCR
Oxford Cambridge and RSA

Copyright Information

OCR is committed to seeking permission to reproduce all third-party content that it uses in its assessment materials. OCR has attempted to identify and contact all copyright holders whose work is used in this paper. To avoid the issue of disclosure of answer-related information to candidates, all copyright acknowledgements are reproduced in the OCR Copyright Acknowledgements Booklet. This is produced for each series of examinations and is freely available to download from our public website (www.ocr.org.uk) after the live examination series.

If OCR has unwittingly failed to correctly acknowledge or clear any third-party content in this assessment material, OCR will be happy to correct its mistake at the earliest possible opportunity.

For queries or further information please contact the Copyright Team, First Floor, 9 Hills Road, Cambridge CB2 1GE.

OCR is part of the Cambridge Assessment Group; Cambridge Assessment is the brand name of University of Cambridge Local Examinations Syndicate (UCLES), which is itself a department of the University of Cambridge.